Glance AHRS

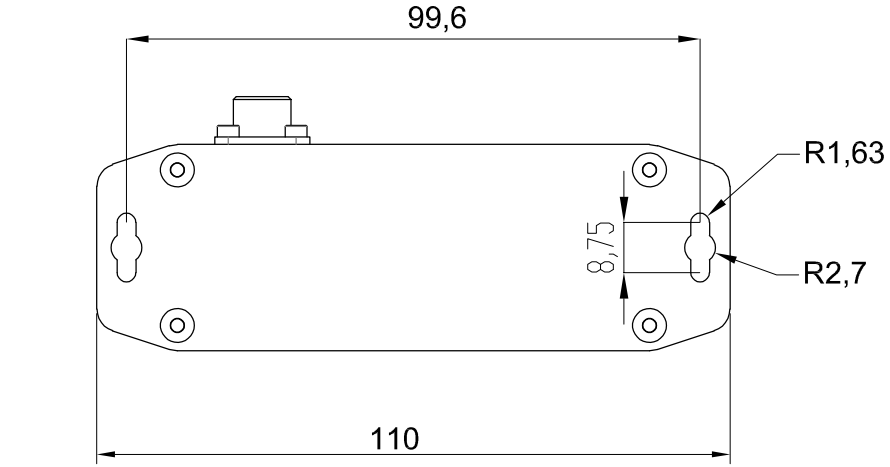

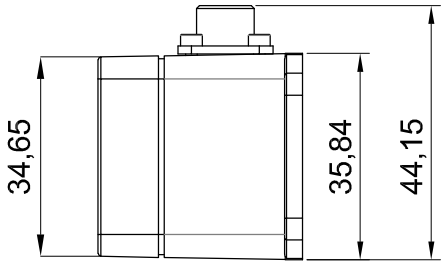

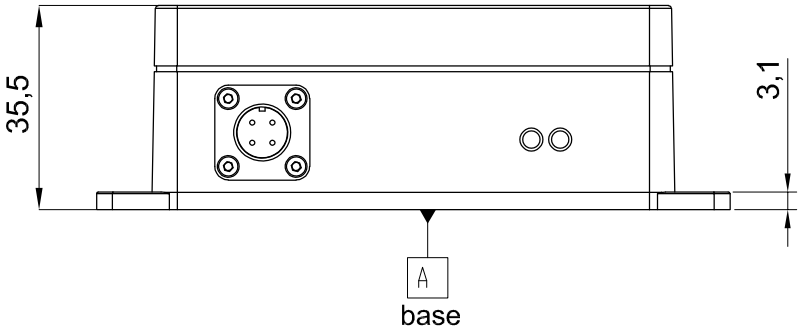

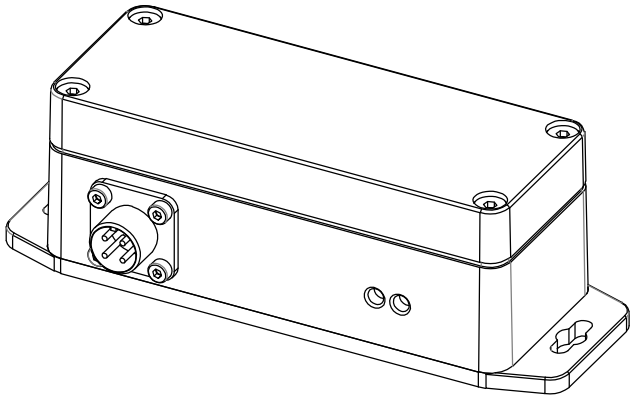

Modifications			Name	Date	Description	Page
Name	Date	edit:			Glance AHRS	1
		check:				
		Norm:			Shematic no. GA.0P.H010.050.190001	of 1